PART NO.	DEMA NO.	APPROVED SUPPLIER	APPROVALS
20754-1	80.70	CHAUNG MEEI	UL, CSA
20754-2	80.70.380	PULSE	-
20754-3	80.70.460	PULSE	-

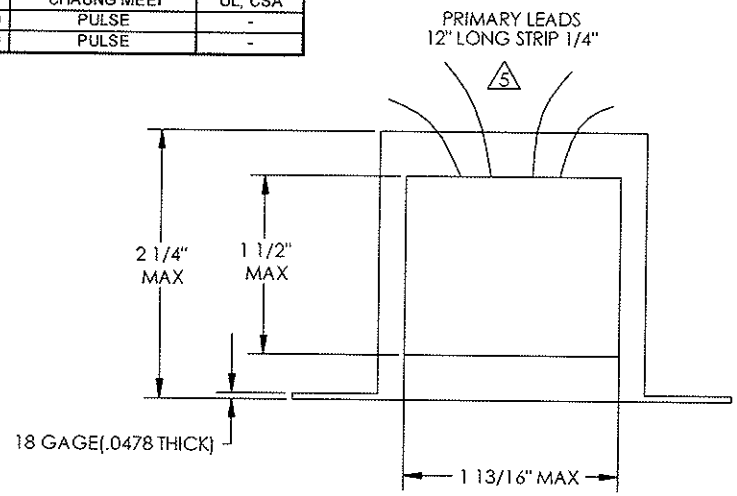

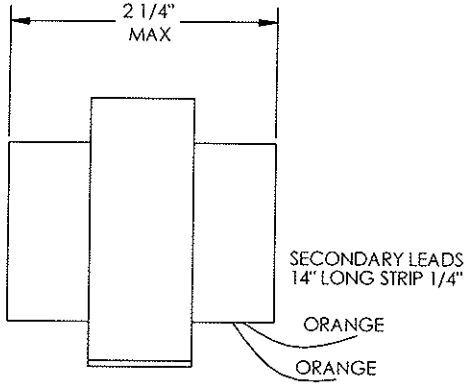

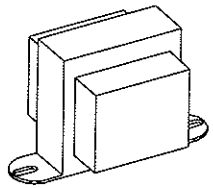

SCHEMATICS

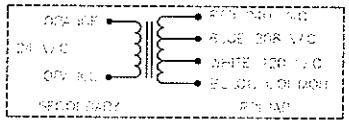

-1 ONLY

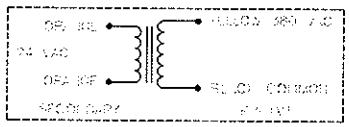

-2 ONLY

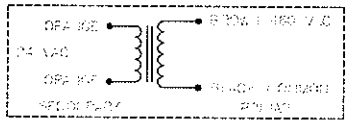

-3 ONLY

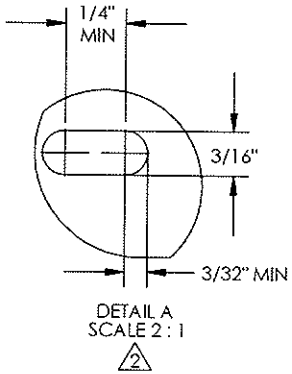

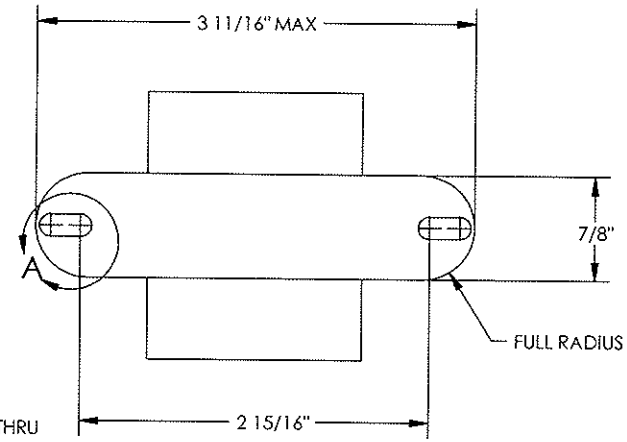

NOTES:

1. 40 VA, 50/60 HZ
2. SLOT MAY HAVE SQUARE ENDS & MAY BREAK THRU END OF MOUNTING BRACKET
3. TRANSFORMER MUST HAVE THERMAL PROTECTION OVERLOAD ON PRIMARY SIDE
4. LABEL OR STAMPING MUST BE ON TRANSFORMER INDICATING WIRING COLOR CODE WITH VOLTAGE
5. SEE SCHEMATICS FOR WIRE COLOR
6. ASSEMBLY TO BE RoHS COMPLIANT

BTB703
REV.
G 26843
H 26913
J 27141
K 27540
L 28633
M 29886
N 31135

LAST REV.:N DESCRIPTION: ADDED NOTE 6 REV. DATE: 2/9/06

© STANDARD MACHINE & MFG. CO. ALL RIGHTS RESERVED. THIS DRAWING AND THE INFORMATION IT CONTAINS ARE THE PROPERTY OF STANDARD MACHINE & MFG. CO., AND NO PART OF THIS DRAWING MAY BE DISCLOSED OR REPRODUCED IN ANY FORM OR ANY MEANS (ELECTRONIC, MECHANICAL, PHOTOCOPYING, OR OTHERWISE) WITHOUT ITS PRIOR WRITTEN PERMISSION.

TOLERANCES	MATERIAL	FINISH	SURFACE FINISH	SCALE 1:1	DRAWN BY	MFG. ENGINEER
COMPLY WITH ENG. SPEC. 26	AS SHOWN	NONE		DATE 5/28/04	MCT	-

40 VA TRANSFORMER

DWG.: 20754

APPROVED: RWH

STANDARD MACHINE & MFG. CO.
ST. LOUIS, MO 63122